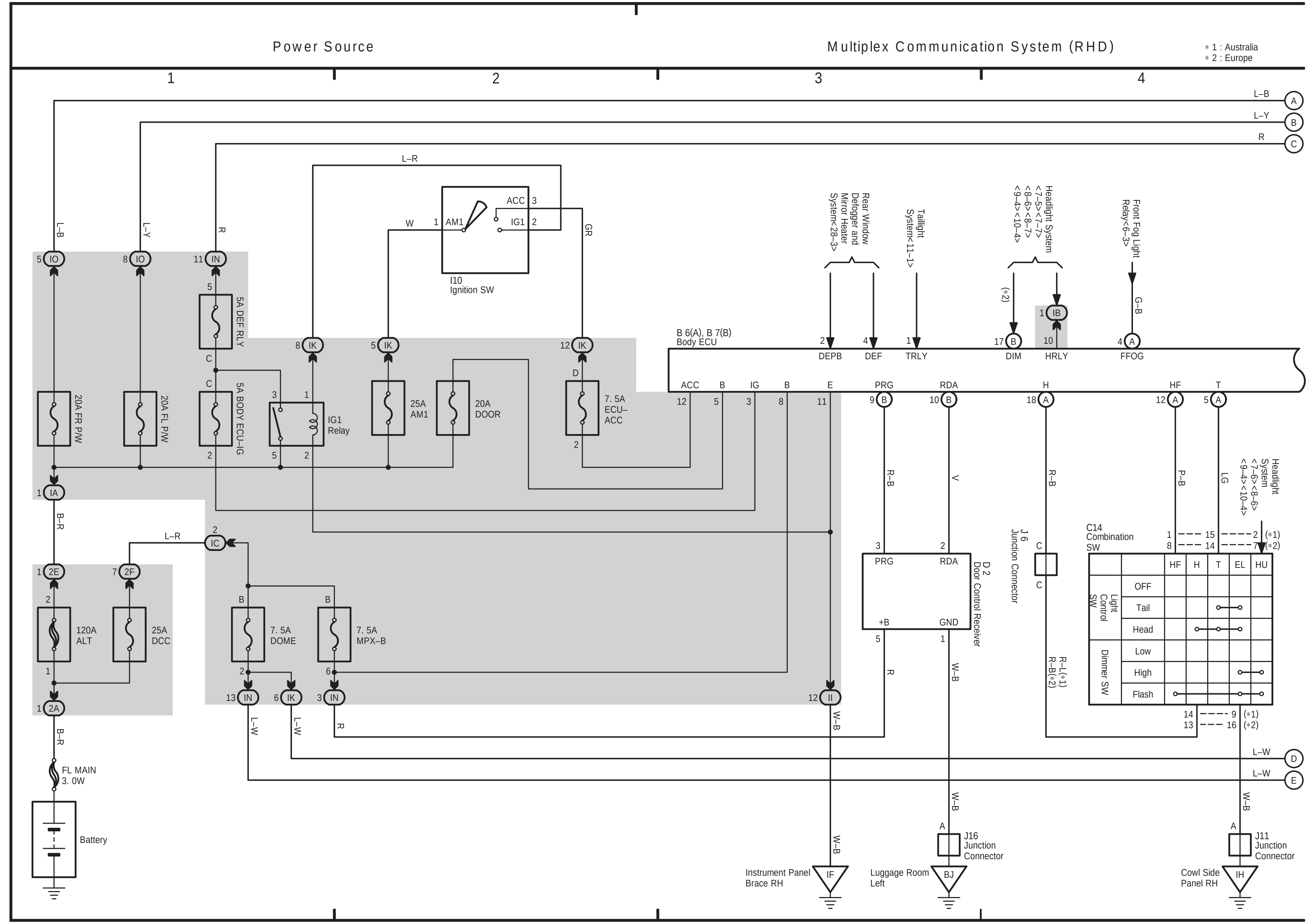
Power Source
Multiplex Communication System (RHD)
Battery
I10 Ignition SW
B 6(A), B 7(B) Body ECU
C14 Combination SW
J1 Junction Connector
J16 Junction Connector
J11 Junction Connector
Instrument Panel Brace RH
Luggage Room Left
Cowl Side Panel RH

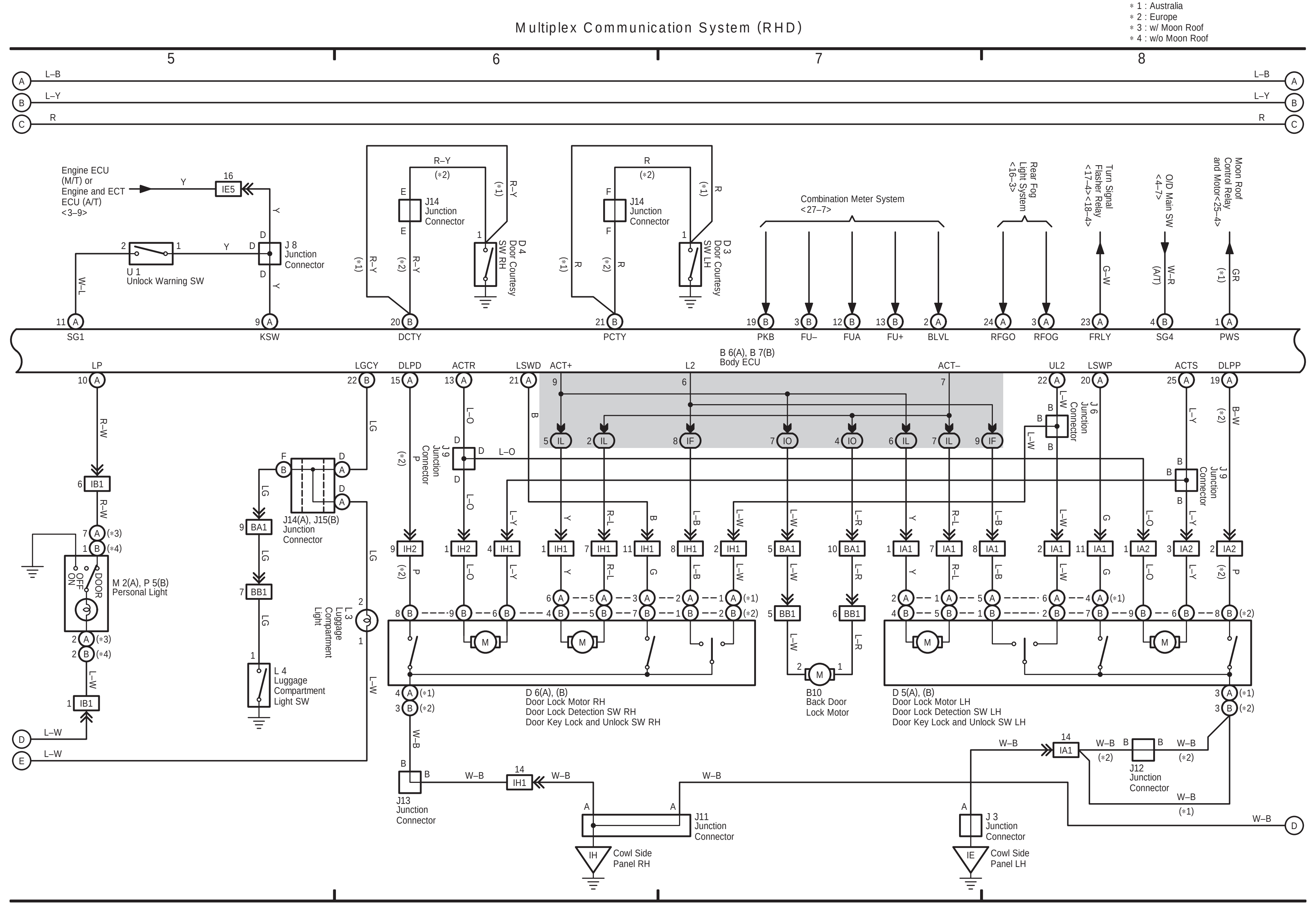
Multiplex Communication System (RHD)
U 1 Unlock Warning SW
L 4 Luggage Compartment Light SW
D 6(A), (B) Door Lock Motor RH Door Lock Detection SW RH Door Key Lock and Unlock SW RH
B10 Back Door Lock Motor
D 5(A), (B) Door Lock Motor LH Door Lock Detection SW LH Door Key Lock and Unlock SW LH
J13 Junction Connector
J11 Junction Connector
Cowl Side Panel RH
Cowl Side Panel LH

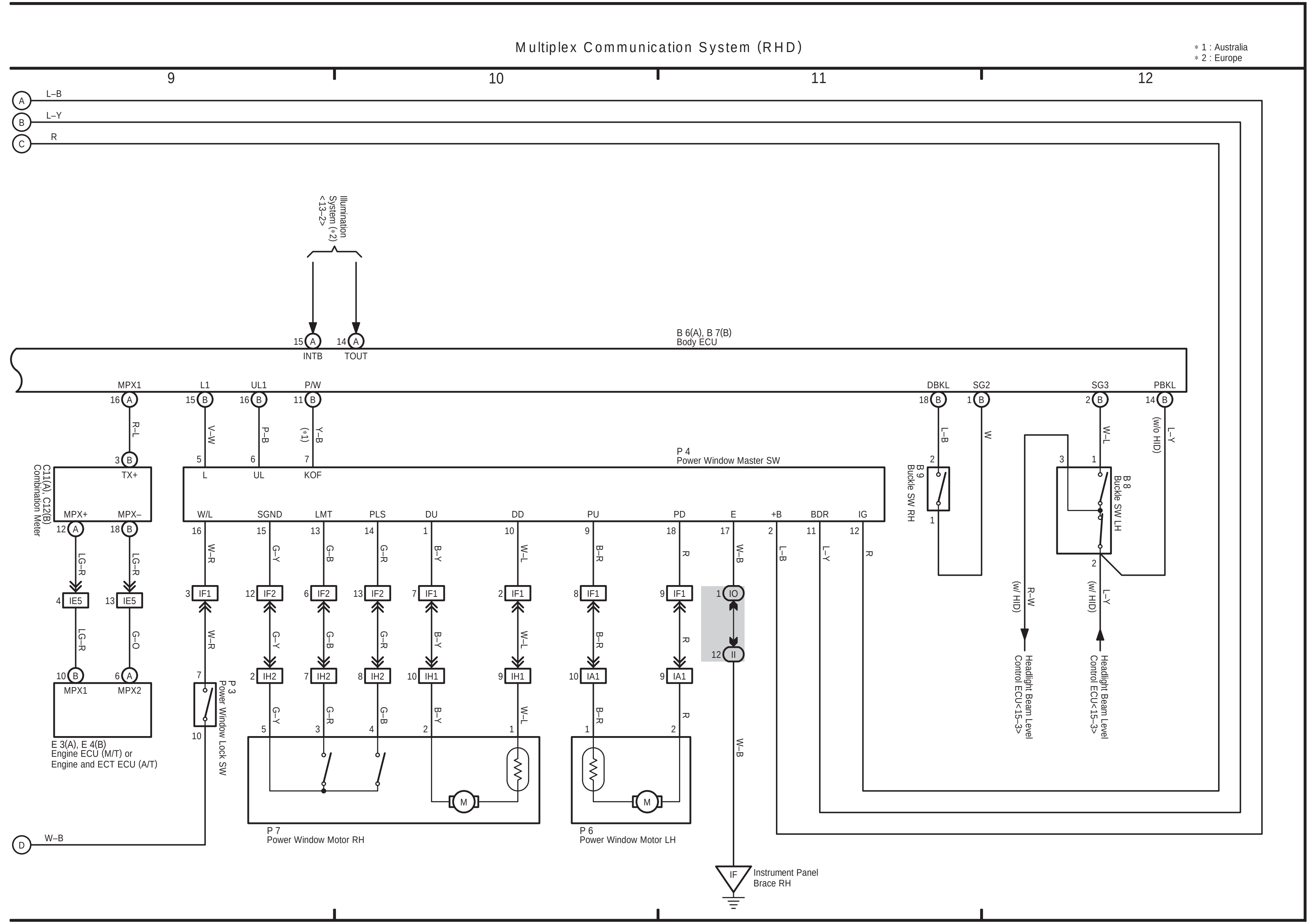
Multiplex Communication System (RHD)
B 6(A), B 7(B) Body ECU
P 4 Power Window Master SW
E 3(A), E 4(B) Engine ECU (M/T) or Engine and ECT ECU (A/T)
P 7 Power Window Motor RH
P 6 Power Window Motor LH
Instrument Panel Brace RH